William Stallings Computer Organization and Architecture 10th Edition

© 2016 Pearson Education, Inc., Hoboken, NJ. All rights reserved.

Chapter 18

Multicore Computers

© 2016 Pearson Education, Inc., Hoboken, NJ. All rights reserved.

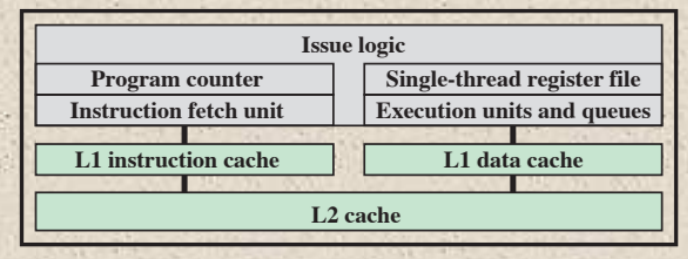

(a) Superscalar

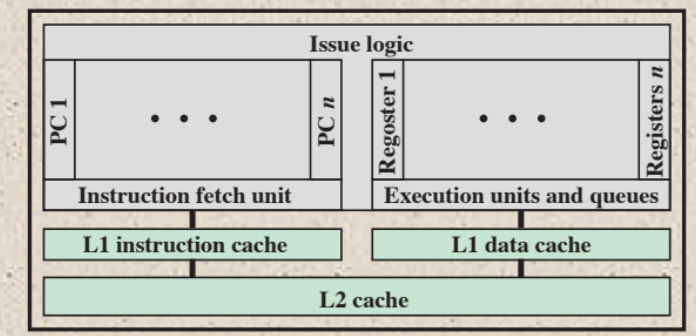

(b) Simultaneous multithreading

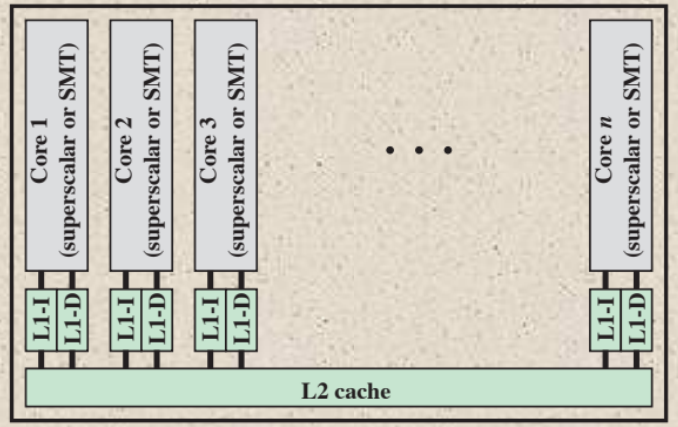

(c) Multicore

Figure 18.1 Alternative Chip Organizations

© 2016 Pearson Education, Inc., Hoboken, NJ. All rights reserved.

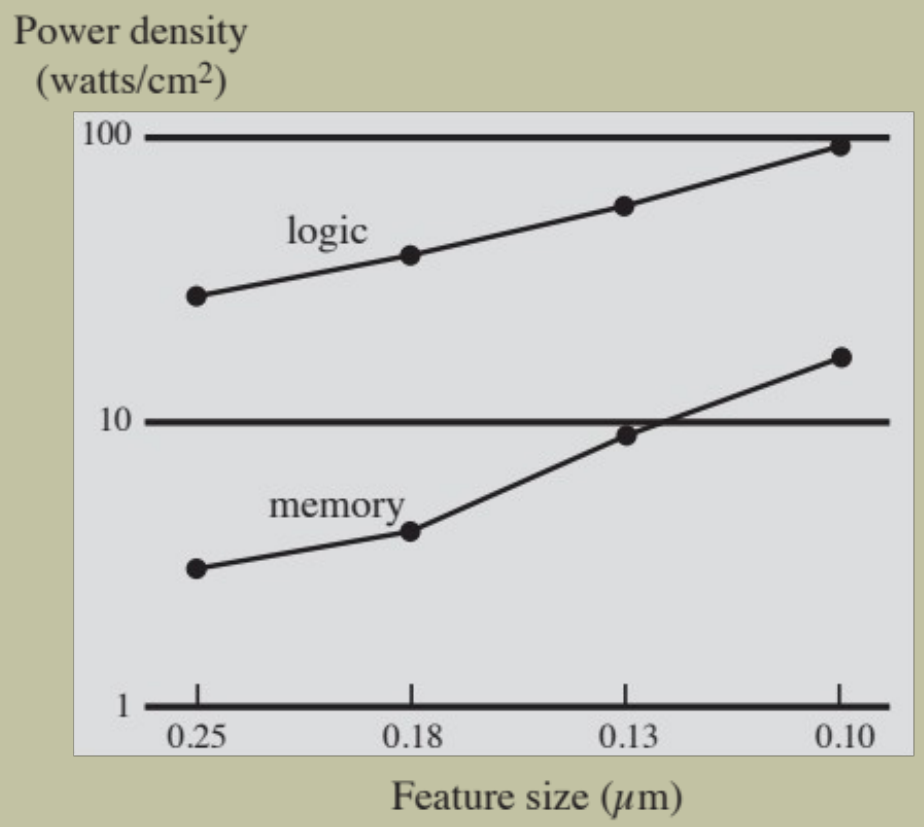

Figure 18.2 Power and Memory Considerations

Powe
r

Memor
y

© 2016 Pearson Education, Inc., Hoboken, NJ. All rights reserved.

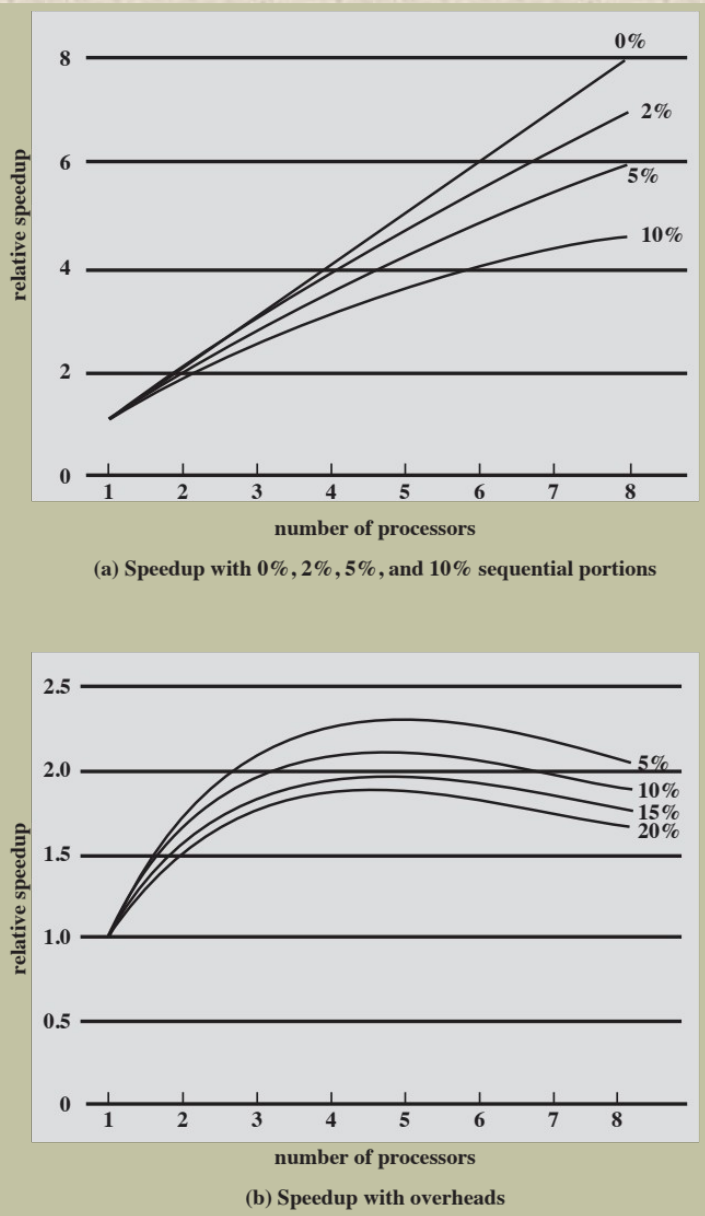

Figure 18.3 Performance Effect of Multiple Cores

© 2016 Pearson Education, Inc., Hoboken, NJ. All rights reserved.

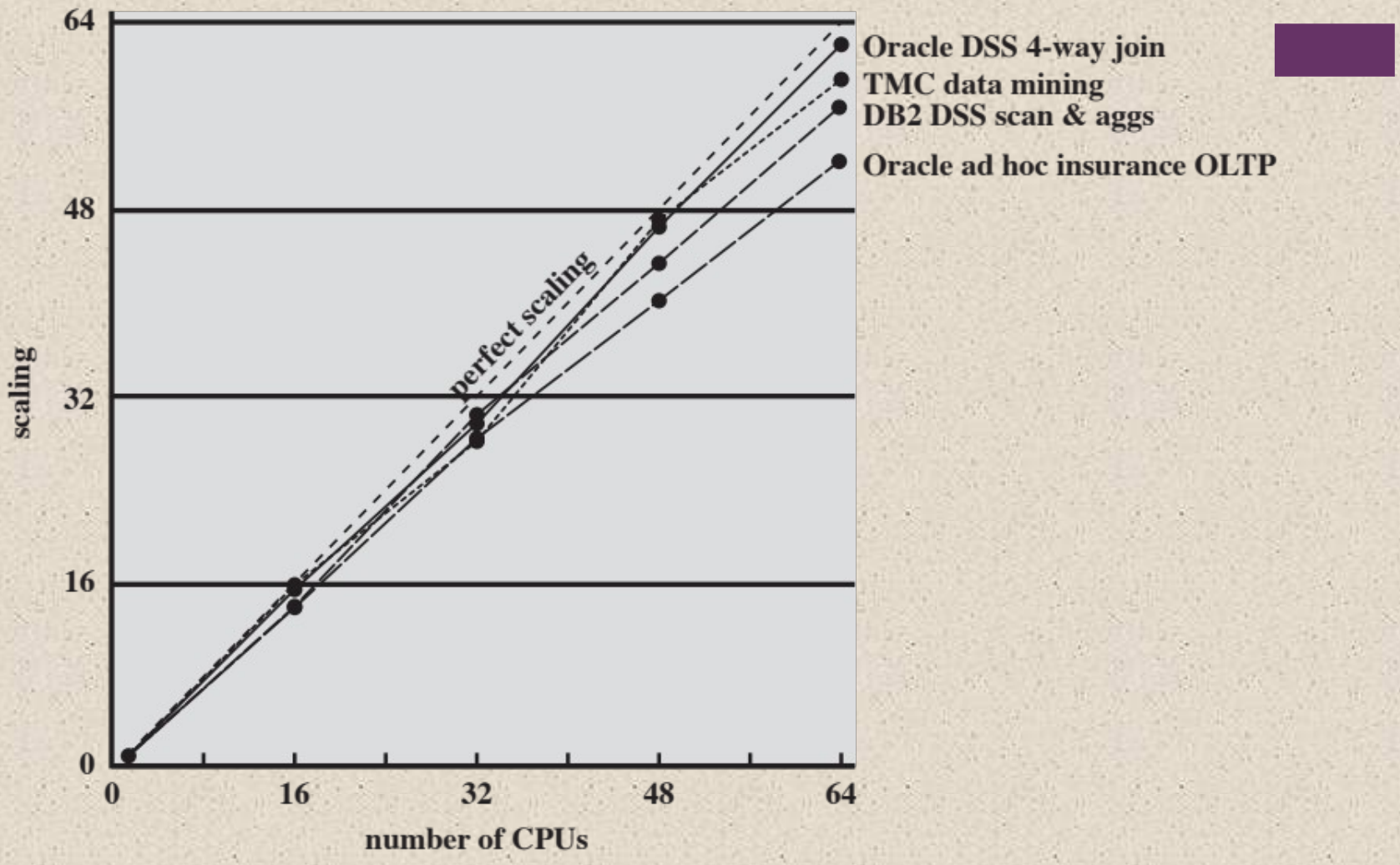

Figure 18.4 Scaling of Database Workloads on Multiple-Processor Hardware

© 2016 Pearson Education, Inc., Hoboken, NJ. All rights reserved.

Effective Applications for Multicore Processors

- **Multi-threaded native applications**
  - Thread-level parallelism
  - Characterized by having a small number of highly threaded processes
- **Multi-process applications**
  - Process-level parallelism
  - Characterized by the presence of many single-threaded processes
- **Java applications**
  - Embrace threading in a fundamental way
  - Java Virtual Machine is a multi-threaded process that provides scheduling and memory management for Java applications
- **Multi-instance applications**
  - If multiple application instances require some degree of isolation, virtualization technology can be used to provide each of them with its own separate and secure environment

© 2016 Pearson Education, Inc., Hoboken, NJ. All rights reserved.

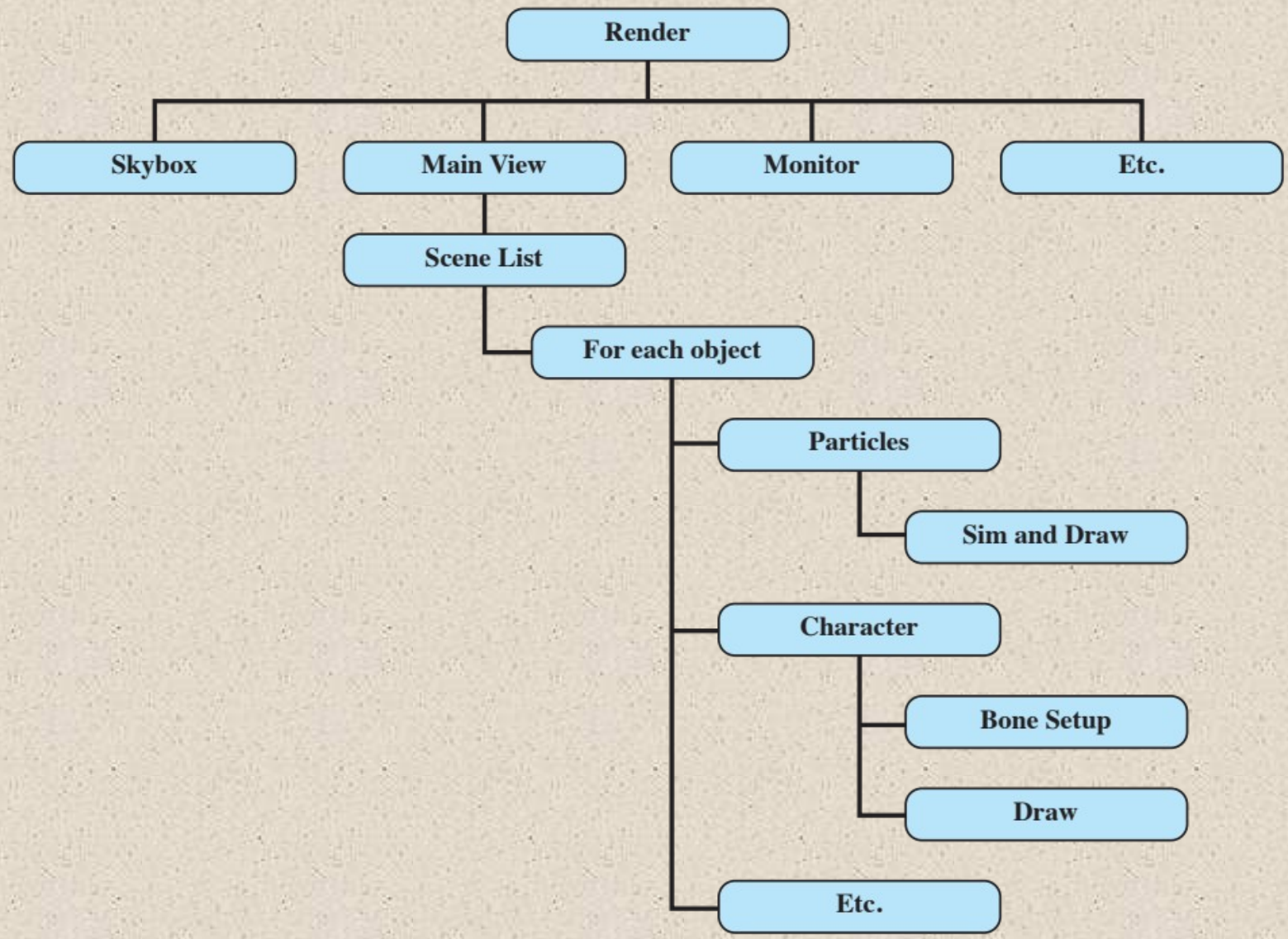

Figure 18.5 Hybrid Threading for Rendering Module

© 2016 Pearson Education, Inc., Hoboken, NJ. All rights reserved.

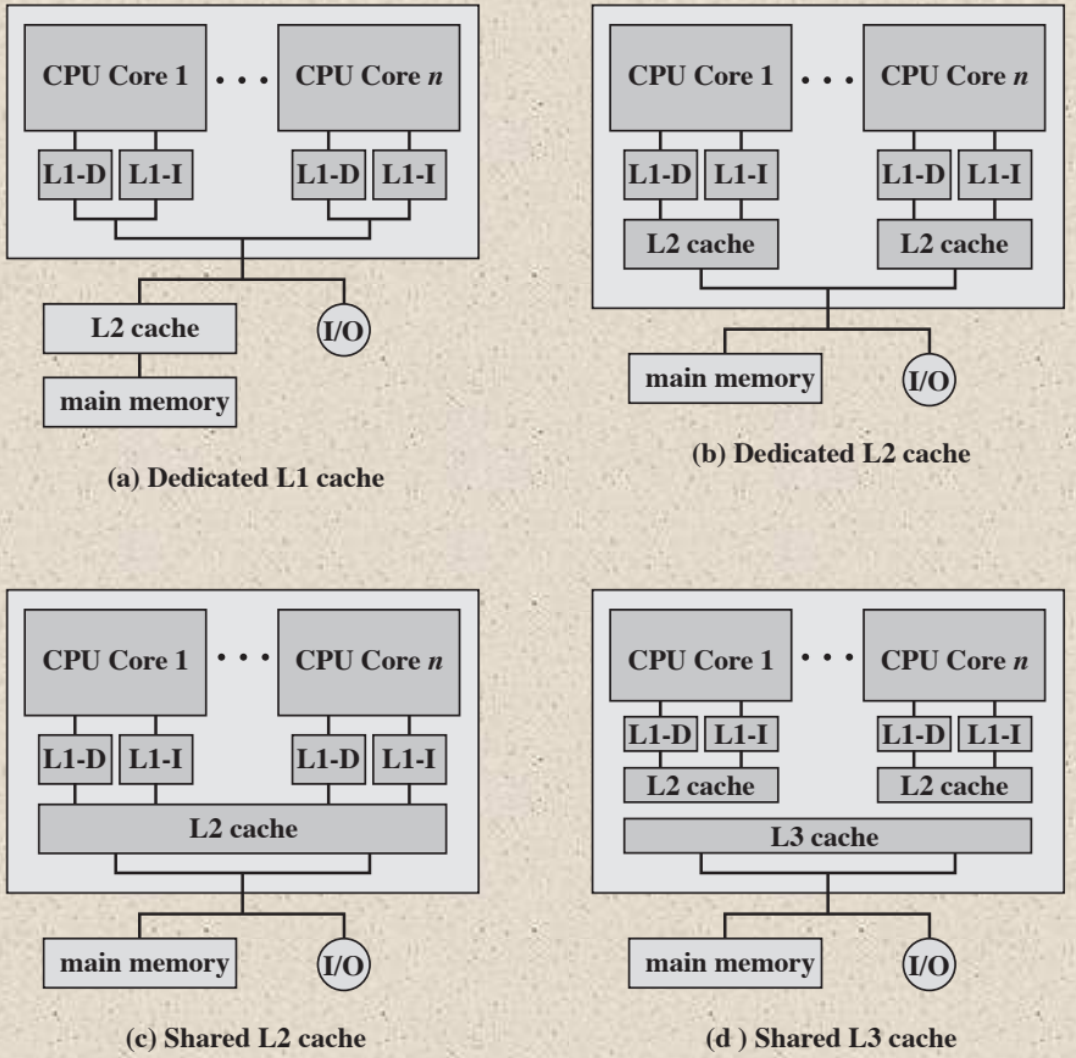

Figure 18.6 Multicore Organization Alternatives

© 2016 Pearson Education, Inc., Hoboken, NJ. All rights reserved.

Heterogeneous Multicore Organization

Refers to a processor chip that includes more than one kind of core

The most prominent trend is the use of both CPUs and graphics processing units (GPUs) on the same chip

- This mix however presents issues of coordination and correctness

GPUs are characterized by the ability to support thousands of parallel execution trends

Thus, GPUs are well matched to applications that process large amounts of vector and matrix data

© 2016 Pearson Education, Inc., Hoboken, NJ. All rights reserved.

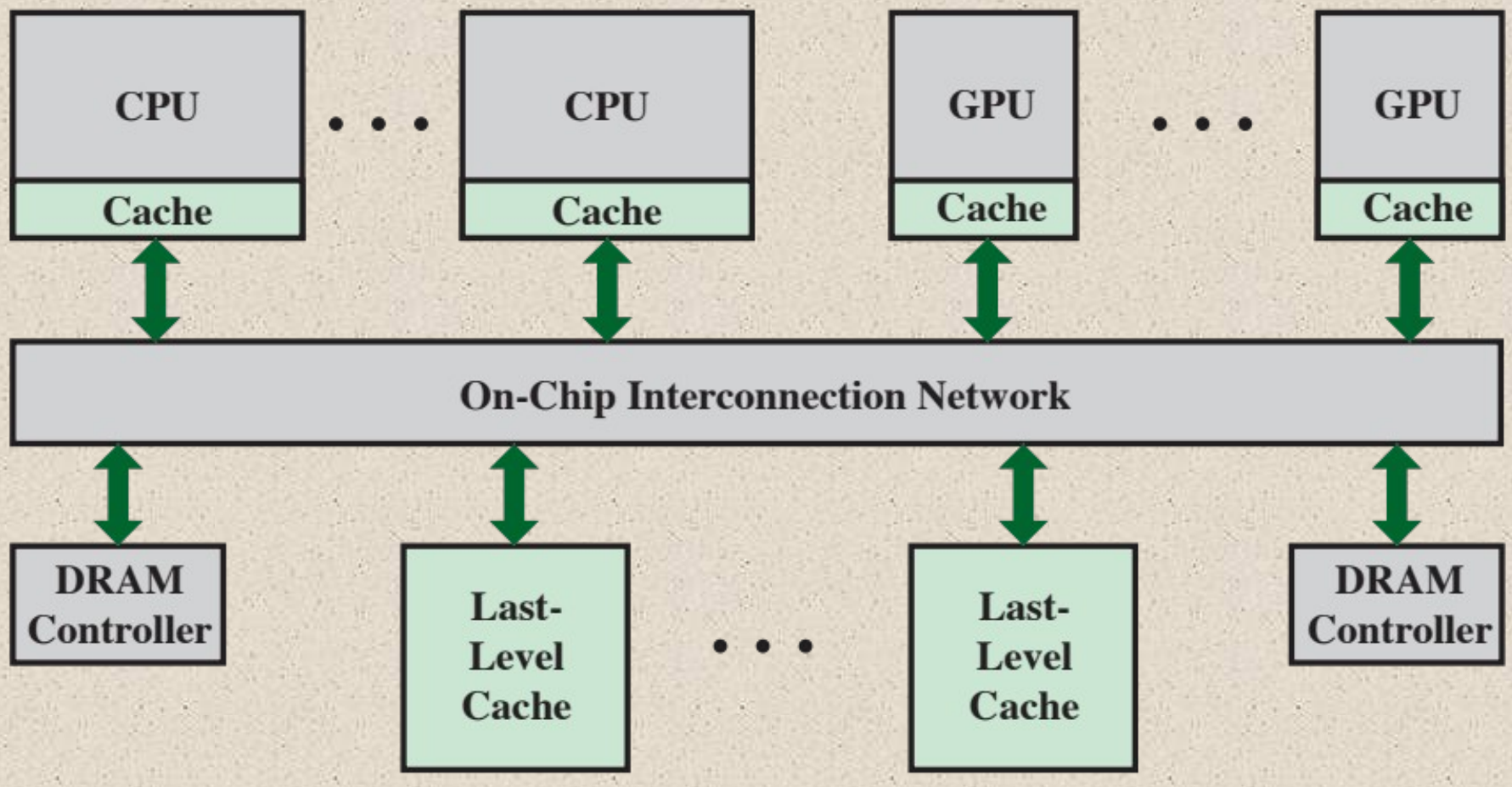

Figure 18.7 Heterogenous Multicore Chip Elements

© 2016 Pearson Education, Inc., Hoboken, NJ. All rights reserved.

Table 18.1

Operating Parameters of AMD 5100K Heterogeneous Multicore Processor

	CPU	GPU
Clock frequency (GHz)	3.8	0.8
Cores	4	384
FLOPS/core	8	2
GFLOPS	121.6	614.4

FLOPS = floating point operations per second
FLOPS/core = number of parallel floating point operations that can be performed

© 2016 Pearson Education, Inc., Hoboken, NJ. All rights reserved.

Heterogeneous System Architecture (HSA)

- Key features of the HSA approach include:
  - The entire virtual memory space is visible to both CPU and GPU
  - The virtual memory system brings in pages to physical main memory as needed
  - A coherent memory policy ensures that CPU and GPU caches both see an up-to-date view of data
  - A unified programming interface that enables users to exploit the parallel capabilities of the GPUs within programs that rely on CPU execution as well
- The overall objective is to allow programmers to write applications that exploit the serial power of CPUs and the parallel-processing power of GPUs seamlessly with efficient coordination at the OS and hardware level

© 2016 Pearson Education, Inc., Hoboken, NJ. All rights reserved.

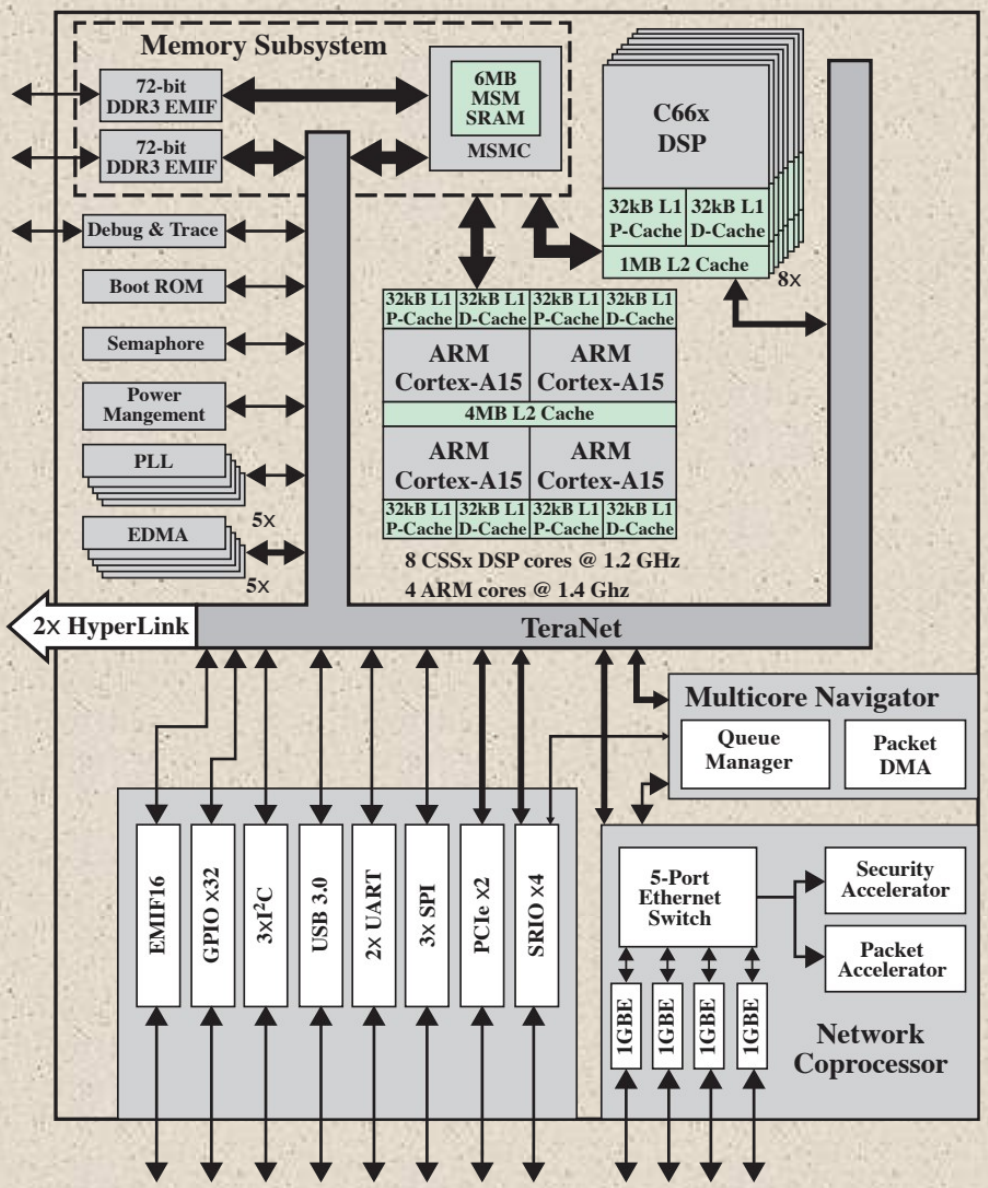

Figure 18.8 Texas Instruments 66AK2H12 Heterogenous Multicore Chip

© 2016 Pearson Education, Inc., Hoboken, NJ. All rights reserved.

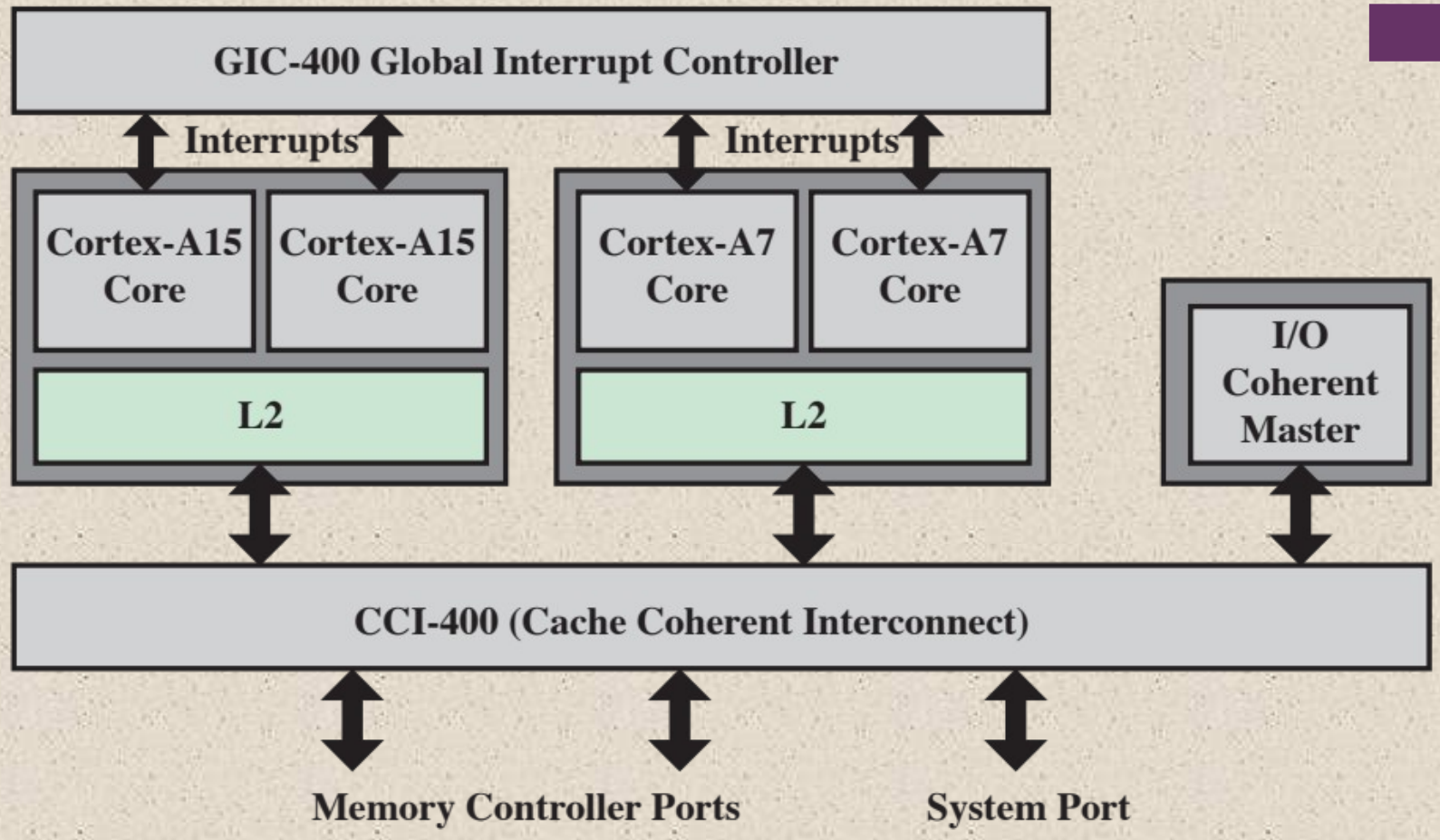

Figure 18.9 Big.Litte Chip Components

© 2016 Pearson Education, Inc., Hoboken, NJ. All rights reserved.

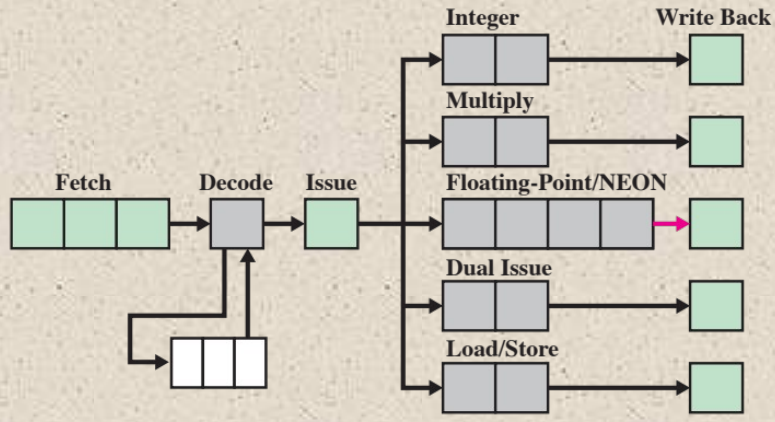

(a) Cortex A-7 Pipeline

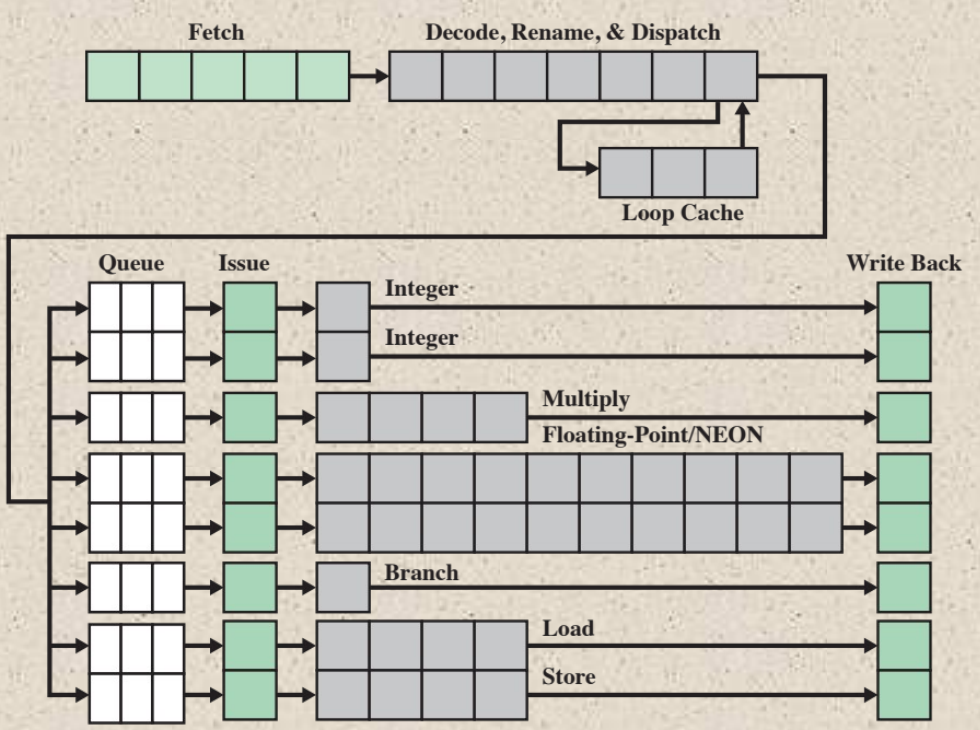

(b) Cortex A-15 Pipeline

Figure 18.10 Cortex A-7 and A-15 Pipelines

© 2016 Pearson Education, Inc., Hoboken, NJ. All rights reserved.

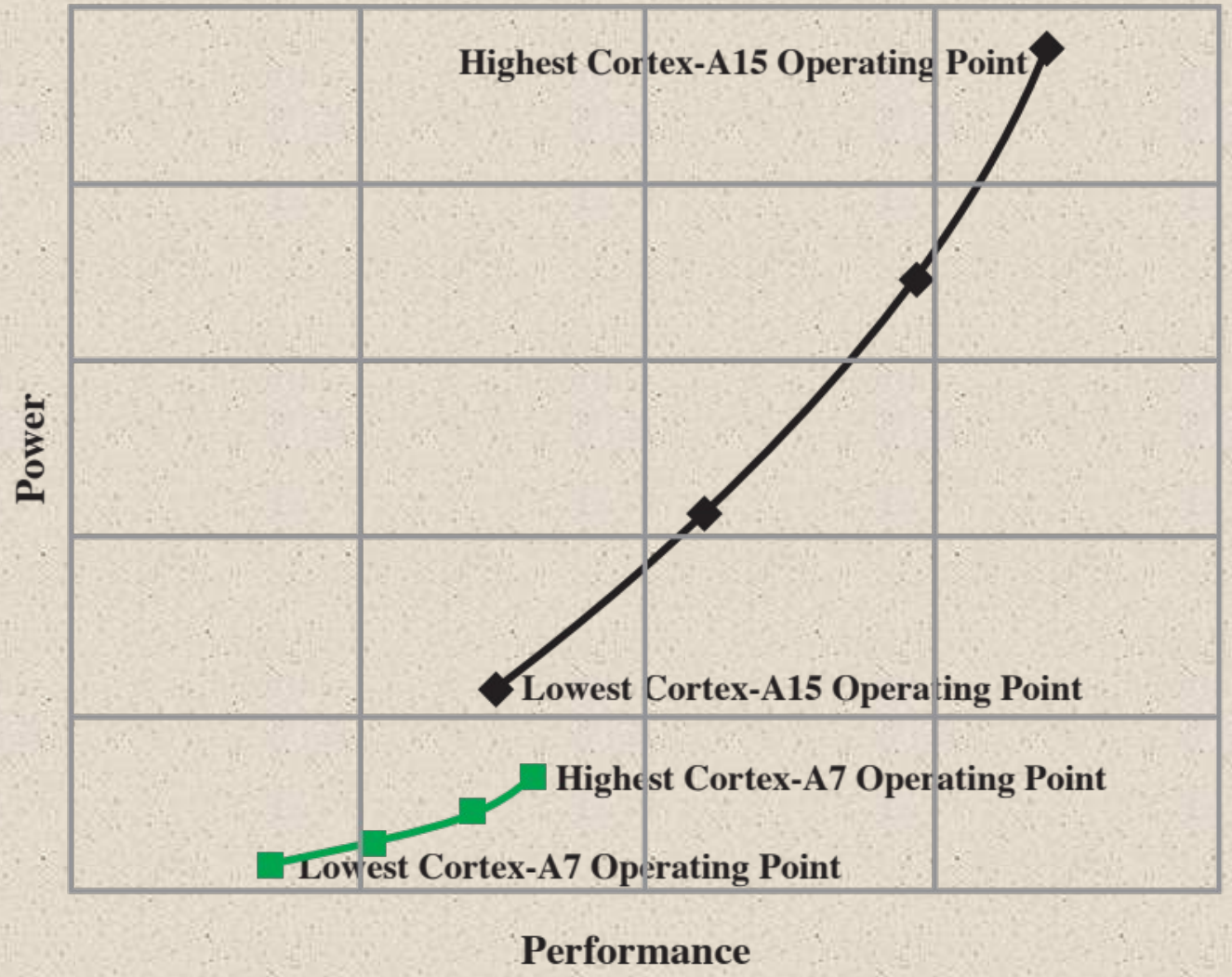

Figure 18.11 Cortex-A7 and A15 Performance Comparison

© 2016 Pearson Education, Inc., Hoboken, NJ. All rights reserved.

Cache Coherence

- May be addressed with software-based techniques
  - Software burden consumes too many resources in a SoC chip
- When multiple caches exist there is a need for a cache-coherence scheme to avoid access to invalid data
- There are two main approaches to hardware implemented cache coherence
  - Directory protocols
  - Snoopy protocols
- ACE (Advanced Extensible Interface Coherence Extensions)
  - Hardware coherence capability developed by ARM
  - Can be configured to implement whether directory or snoopy approach
  - Has been designed to support a wide range of coherent masters with differing capabilities
  - Supports coherency between dissimilar processors enabling ARM big.Little technology
  - Supports I/O coherency for un-cached masters, supports masters with differing cache line sizes, differing internal cache state models, and masters with write-back or write-through caches

© 2016 Pearson Education, Inc., Hoboken, NJ. All rights reserved.

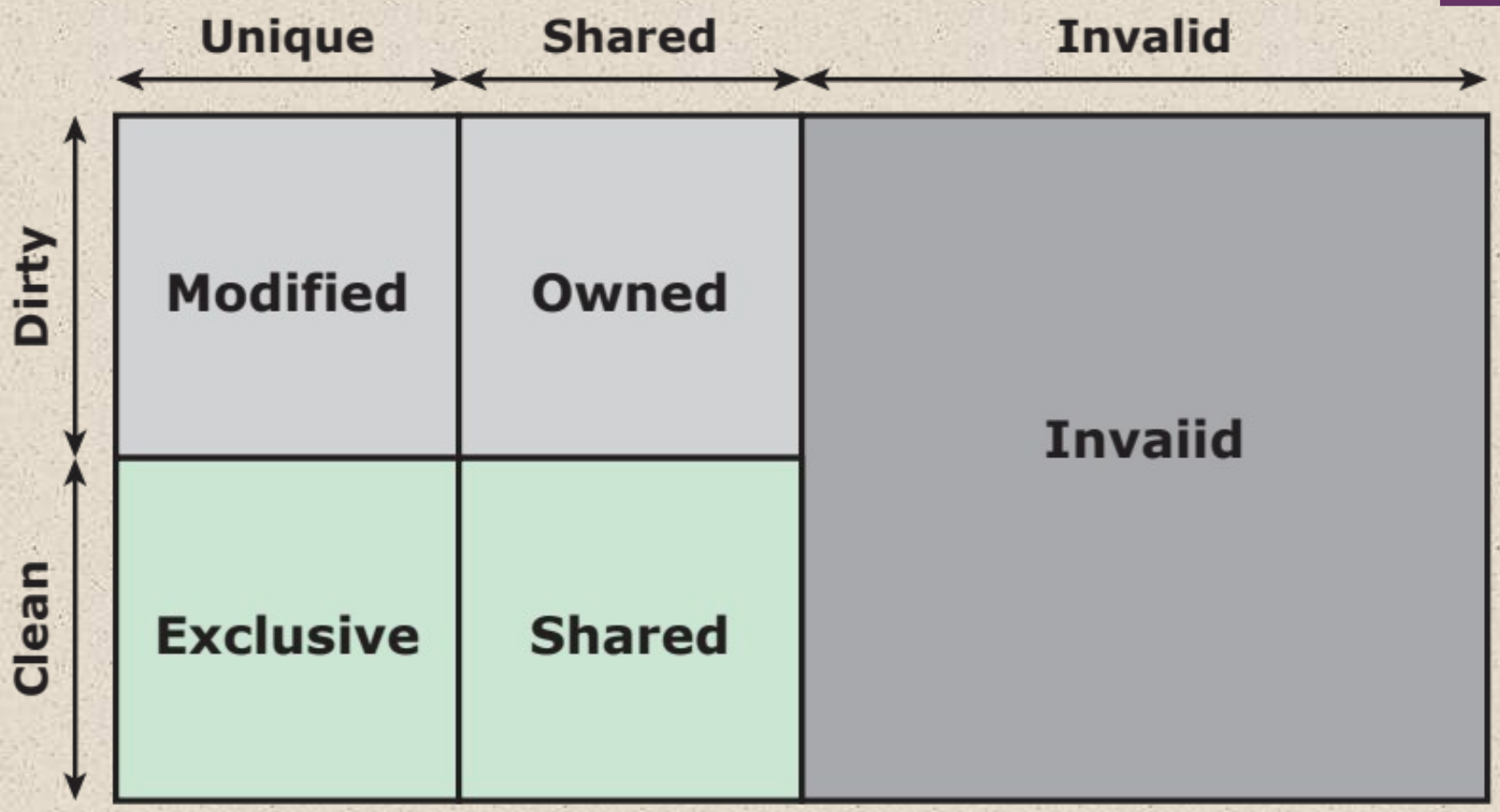

Figure 18.12 ARM ACE Cache Line States

© 2016 Pearson Education, Inc., Hoboken, NJ. All rights reserved.

Table 18.2 Comparison of States in Snoop Protocols

(a) MESI

	Modified	Exclusive	Shared	Invalid
Clean/Dirty	Dirty	Clean	Clean	N/A
Unique?	Yes	Yes	No	N/A
Can write?	Yes	Yes	No	N/A
Can forward?	Yes	Yes	Yes	N/A
Comments	Must write back to share or replace	Transitions to M on write	Shared implies clean, can forward	Cannot read

(b) MOESI

	Modified	Owned	Exclusive	Shared	Invalid
Clean/Dirty	Dirty	Dirty	Clean	Either	N/A
Unique?	Yes	Yes	Yes	No	N/A
Can write?	Yes	Yes	Yes	No	N/A
Can forward?	Yes	Yes	Yes	No	N/A
Comments	Can share without write back	Must write back to transition	Transitions to M on write	Shared, can be dirty or clean	Cannot read

© 2016 Pearson Education, Inc., Hoboken, NJ. All rights reserved.

(Table can be found on page 676 in the

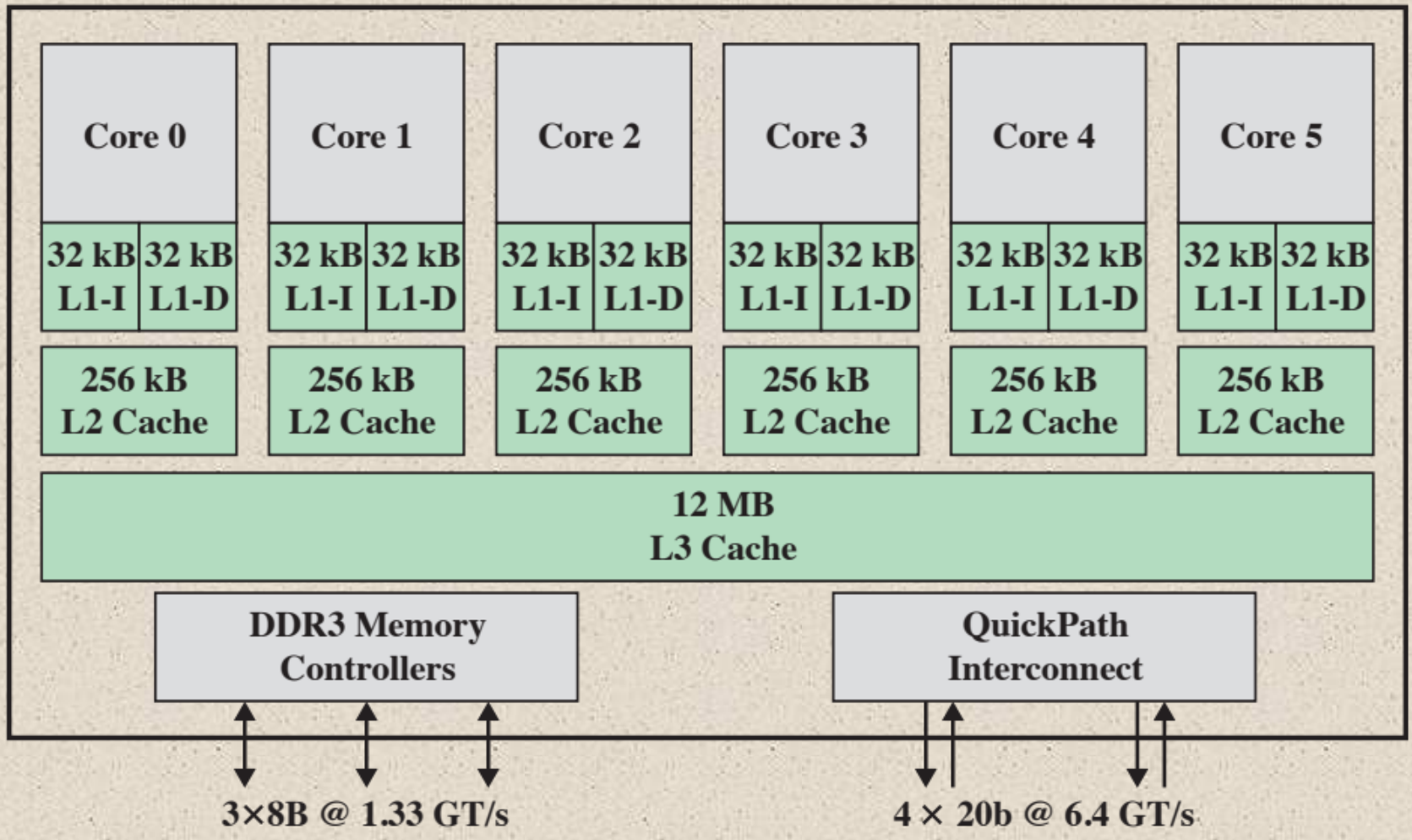

Figure 18.13 Intel Core i7-990X Block Diagram

© 2016 Pearson Education, Inc., Hoboken, NJ. All rights reserved.

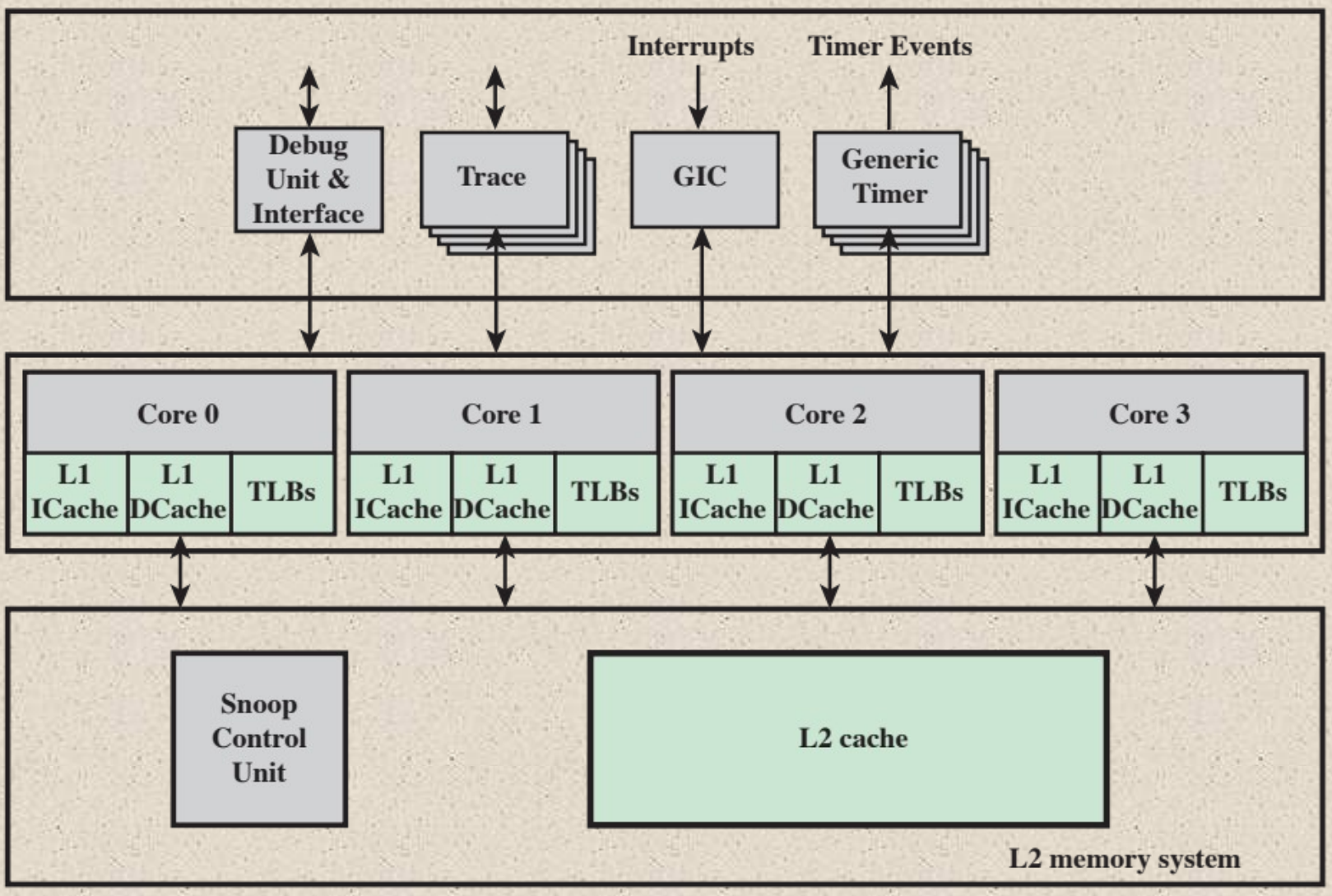

Figure 18.14 ARM Cortex-A15 MPCore Chip Block Diagram

© 2016 Pearson Education, Inc., Hoboken, NJ. All rights reserved.

Interrupt Handling

Generic interrupt controller (GIC) provides:

- Masking of interrupts
- Prioritization of the interrupts
- Distribution of the interrupts to the target A15 cores
- Tracking the status of interrupts
- Generation of interrupts by software

GIC

- Is memory mapped
- Is a single functional unit that is placed in the system alongside A15 cores
- This enables the number of interrupts supported in the system to be independent of the A15 core design
- Is accessed by the A15 cores using a private interface through the SCU

© 2016 Pearson Education, Inc., Hoboken, NJ. All rights reserved.

GIC

Designed to satisfy two functional requirements:

- Provide a means of routing an interrupt request to a single CPU or multiple CPUs as required
- Provide a means of interprocessor communication so that a thread on one CPU can cause activity by a thread on another CPU

Can route an interrupt to one or more CPUs in the following three ways:

- An interrupt can be directed to a specific processor only
- An interrupt can be directed to a defined group of processors
- An interrupt can be directed to all processors

© 2016 Pearson Education, Inc., Hoboken, NJ. All rights reserved.

Interrupts can be:

- Inactive
  - One that is nonasserted, or which in a multiprocessing environment has been completely processed by that CPU but can still be either Pending or Active in some of the CPUs to which it is targeted, and so might not have been cleared at the interrupt source
- Pending
  - One that has been asserted, and for which processing has not started on that CPU
- Active
  - One that has been started on that CPU, but processing s not complete
  - Can be pre-empted when a new interrupt of higher priority interrupts A15 core interrupt processing
- Interrupts come from the following sources:
  - Interprocessor interrupts (IPIs)
  - Private timer and/or watchdog interrupts
  - Legacy FIQ lines
  - Hardware interrupts

© 2016 Pearson Education, Inc., Hoboken, NJ. All rights reserved.

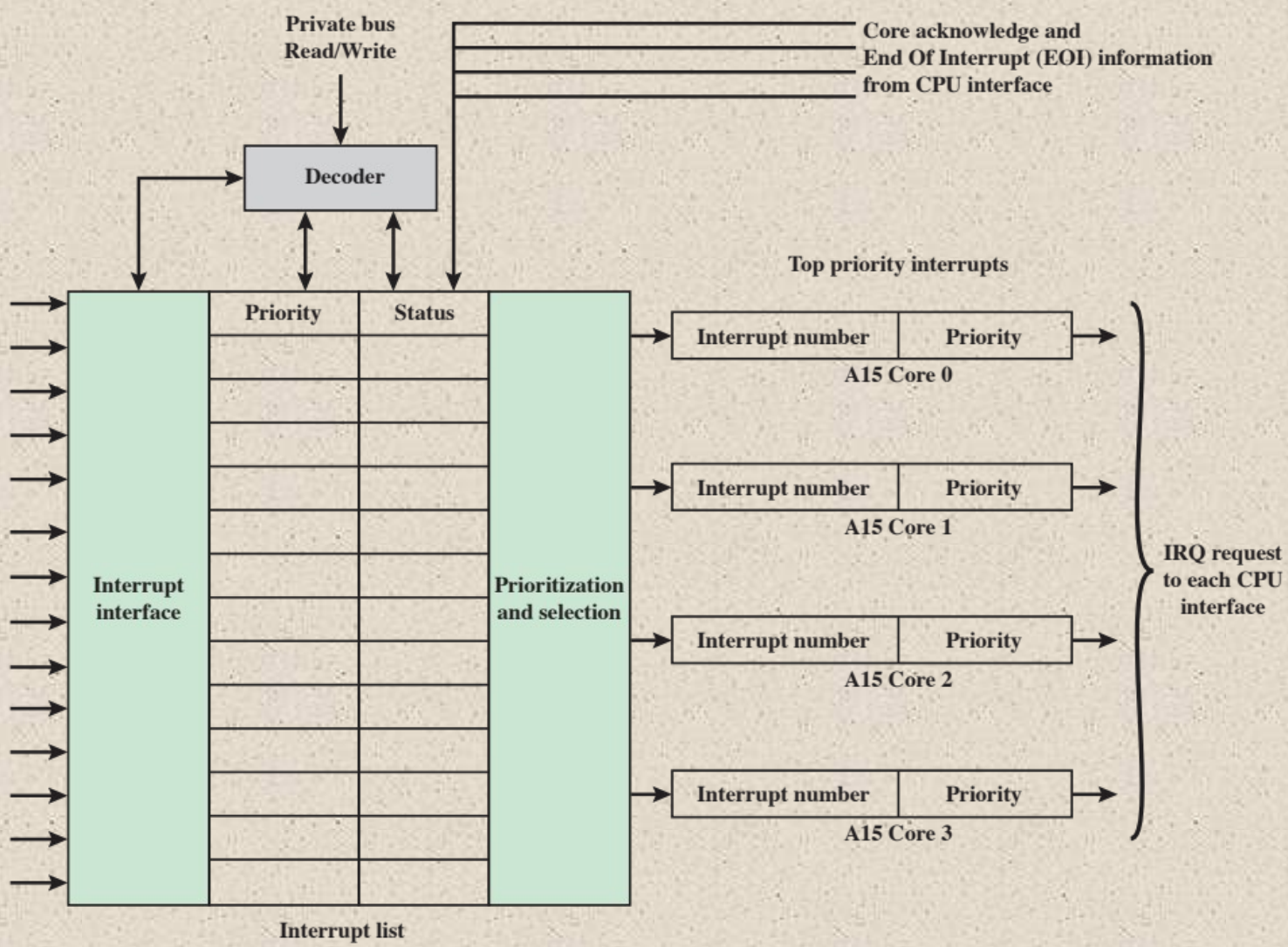

Figure 18.15 Interrupt Distributor Block Diagram

© 2016 Pearson Education, Inc., Hoboken, NJ. All rights reserved.

Cache Coherency

- Snoop Control Unit (SCU) resolves most of the traditional bottlenecks related to access to shared data and the scalability limitation introduced by coherence traffic
- L1 cache coherency scheme is based on the MESI protocol
- Direct Data Intervention (DDI)
  - Enables copying clean data between L1 caches without accessing external memory
  - Reduces read after write from L1 to L2
  - Can resolve local L1 miss from remote L1 rather than L2
- Duplicated tag RAMs
  - Cache tags implemented as separate block of RAM
  - Same length as number of lines in cache
  - Duplicates used by SCU to check data availability before sending coherency commands
  - Only send to CPUs that must update coherent data cache
- Migratory lines
  - Allows moving dirty data between CPUs without writing to L2 and reading back from external memory

© 2016 Pearson Education, Inc., Hoboken, NJ. All rights reserved.

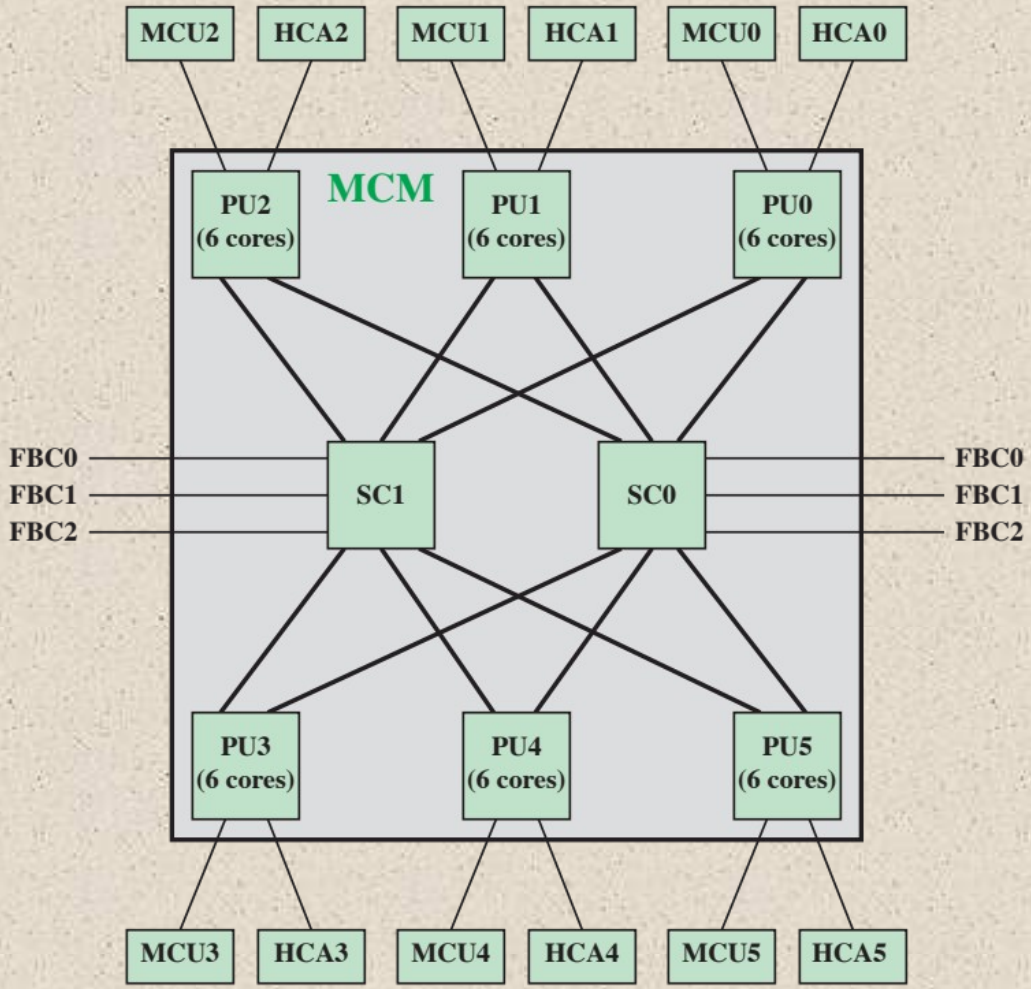

FBC = fabric book connectivity
HCA = host channel adapter
MCM = multichip module
MCU = memory control unit
PU = processor unit
SC = storage control

Figure 18.16 IBM zEC12 Processor Node Structure

© 2016 Pearson Education, Inc., Hoboken, NJ. All rights reserved.

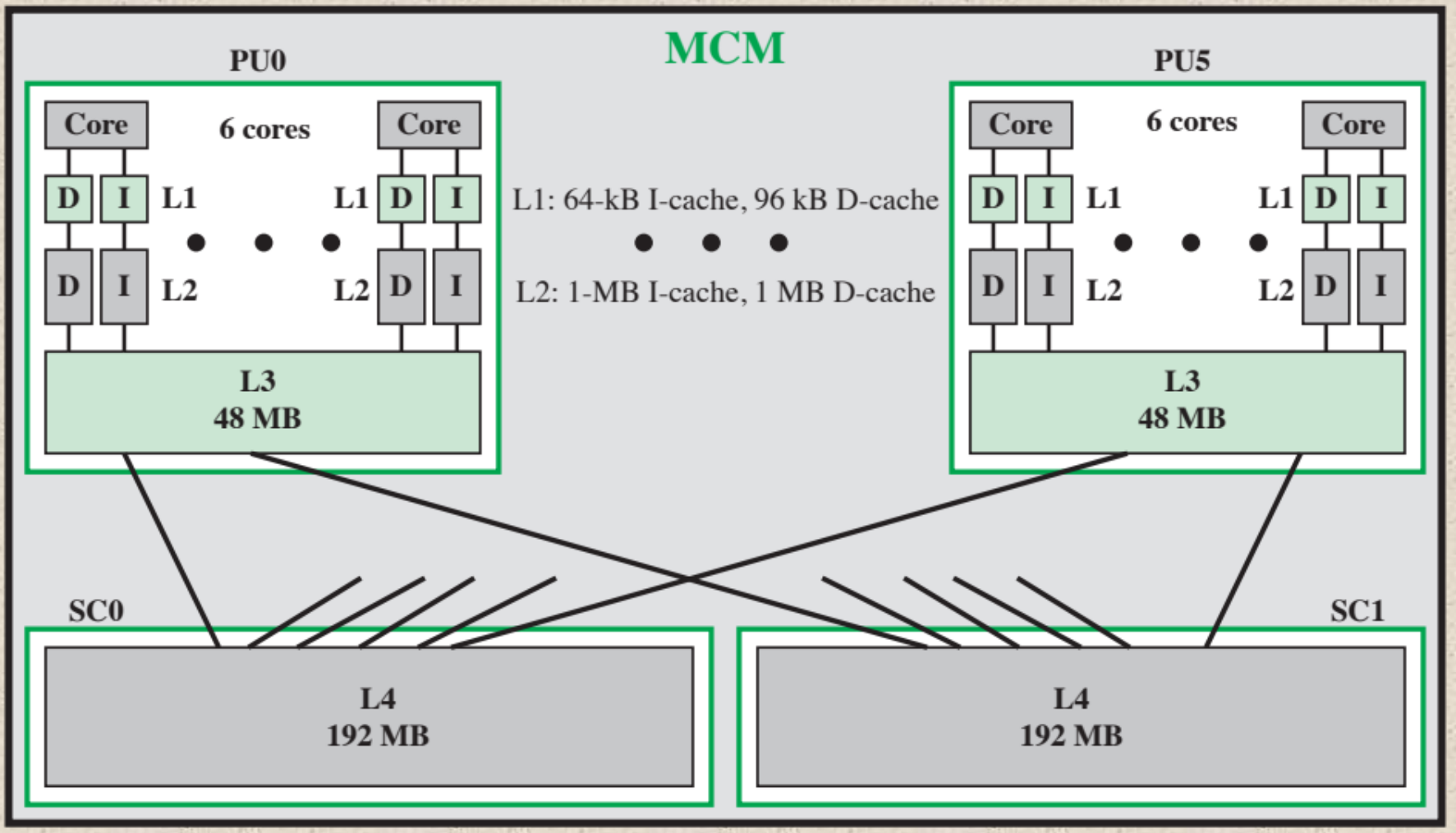

Figure 18.17 IBM zEC12 Cache Hierarchy

© 2016 Pearson Education, Inc., Hoboken, NJ. All rights reserved.

Summary

Chapter 18

- Hardware performance issues
  - Increase in parallelism and complexity
  - Power consumption
- Software performance issues
  - Software on multicore
  - Valve game software example
- Intel Core i7-990X
- IBM zEnterprise EC12 mainframe
  - Organization
  - Cache structure

Multicore Computers

- Multicore organization
  - Levels of cache
  - Simultaneous multithreading
- Heterogeneous multicore organization
  - Different instruction set architectures
  - Equivalent instruction set architectures
  - Cache coherence and the MOESI model
- ARM Cortex-A15 MPCore
  - Interrupt handling
  - Cache coherency
  - L2 cache coherency

© 2016 Pearson Education, Inc., Hoboken, NJ. All rights reserved.